ARTICLE IN PRESS

Materials Today: Proceedings xxx (xxxx) xxx

Contents lists available at ScienceDirect

Materials Today: Proceedings

journal homepage: www.elsevier.com/locate/matpr

Reliability assessment for the critical buckling load of SDTS columns with the tubular cross-section

Duy-Duan Nguyen, Trong-Ha Nguyen *

Department of Civil Engineering, Vinh University, Vinh 461010, Viet Nam

ARTICLE INFO

Article history:
Available online xxxx

Keywords:
Reliability assessment
Symmetric double tapered steel column
Monte Carlo simulation
Random variables
Critical buckling load

ABSTRACT

The symmetric double tapered steel (SDTS) columns with tubular cross-section (TC) are common structures in the civil and industrial engineering because of its bearing capacity and aesthetics advantages. However, determining the critical buckling load (CBL) of the SDTS column with TC is not specified in the design standards. Meanwhile, the quality inspection and testing of the bearing capacity of this structure are necessary problems. On the other hand, the CBL of the SDTS column with TC depends on the geometrical and material parameters, which are random variables in practices. This paper aims to perform the reliability assessment of CBL of the SDTS column with TC considering geometrical and material random parameters. To achieve the goal, the deterministic model is built based on the CBL of the SDTS column with TC using the Bubnov-Galerkin method. Meanwhile, the stochastic model is established based on the deterministic model, in which the geometrical and material are random parameters. Finally, the reliability assessment is conducted using the Monte Carlo simulation method. The sensitivity effect of the input parameters on the reliability value is also investigated in this study.

Selection and peer-review under responsibility of the scientific committee of the International Conference on Materials, Processing & Characterization.

1. Introduction

The tapered steel columns have been popularly used in civil engineering structures. Critical buckling load (CBL) is the most important parameter in designing this steel column. In 1961, Timoshenko and Gere proposed a solution for calculating the elastic buckling load of steel columns, in which this solution is similar to the Euler approach using a modified factor related to the maximum and minimum inertia moments of the cross-sections [1]. Lee et al. [2] developed a formula to calculate the critical load of tapered columns using the minimum cross-section with an equivalent factor. A similar approach was studied by Hirt and Crisinel [3] using an equivalent cross-section. Marques et al. [4] proposed a method for determining the critical buckling load of tapered steel columns. A study on the critical load of tapered steel columns using the differential equation approach combined with Newton-Raphson iteration was conducted by Dang and Nguyen [5]. Recently, Nguyen and Nguyen [6] used artificial neural networks to predict the critical loading capacity of tapered I-section steel columns. The aforementioned studies focused on the critical load of tapered steel columns; however, the axial loading capacity of the double tapered steel column is different because of the shape. Moreover, the current design codes such as ASCE, Eurocode 3, BS and TCVN 5575 suggest considering the minimum cross-section with a multiplying coefficient when designing the tapered steel columns. However, this suggestion has caused a discrepancy in design practices [7].

Reliability-based design can reduce the uncertainty of input parameters. Specifically, steel structures contain a high slenderness and depend on random variables. There are many studies related to the reliability analysis of steel structures [5,8–13]. These works mostly used first-order and second-order reliability methods, Cornell index, and Monte Carlo simulation method to assess the structural reliability with random input variables. Moreover, the reliability of steel columns with varying cross-section was also studied by many researchers. Jin et al. [14] proposed an integrated method for designing steel columns with varying cross-sections based on nonlinear procedure. Tancova [15] developed a formulas for designing the reliability-based stability of steel columns, beams and beam-column connections. Reliability analyses of tapered steel

* Corresponding author.
E-mail address: trongha@vinhuni.edu.vn (T.-H. Nguyen).

https://doi.org/10.1016/j.matpr.2022.04.461
2214-7853/
Selection and peer-review under responsibility of the scientific committee of the International Conference on Materials, Processing & Characterization.

columns subjected to earthquakes based on joint analysis of hazard and fragility were performed by Malekizadeh et al. [16].

So far, the determination of the CBL of the symmetric double tapered steel (SDTS) column with tubular cross-section (TC) was used approximate methods or the conversion method. Moreover, in fact, input geometrical and material properties parameters were random. Therefore, there will be errors in determining the bearing capacity of the column. This paper aims to apply Bubnov-Galerkin method for predicting the CBL of the SDTS column with the tubular cross-section. From the deterministic model, a stochastic model was built based on the deterministic model with the geometrical and material parameters are random variables. Reliability assessment based on the Monte Carlo simulation method (MCs). Finally, the investigation on the sensitivity of the input parameters to the reliability value was also performed.

2. Theoretical background

2.1. Euler's critical load

The Euler's critical load was proposed by Euler in 1757 [19], in which the relationship between bending moment and the equation of elasticity $v(x)$ was expressed the form differential equation as follows.

$$-Pv(x) = M(x) = EI\frac{d^2 v(x)}{dx^2} \tag{1}$$

or.

$$\frac{d^2 v}{dx^2} + \frac{P}{EI}v(x) \tag{2}$$

where E is the elastic modulus; I is the moment of inertia of the cross section; $M(x)$ is the variation of the bending moment along the column axis; x is the coordinate of the column axis.

2.2. Bubnov-Galerkin method

Bubnov-Galerkin method can be considered as applying an orthogonal projection to the operator [17]. Assuming that the structural system is in the deflected state, the balanced differential equation of the system has the form as:

$$L(x, v, v', v'', \ldots) = 0 \tag{3}$$

Assuming that the solution of the differential equation (3) has the form of a numeric string that includes p terms where p is an integer.

$$v = a_1 g_1(x) + a_2 g_2(x) + \ldots + a_p g_p(x) = \sum_{i=1}^{p} a_i g_i(x) \tag{4}$$

where a_i are unknown coefficients; $g_i(x)$ are the independent functions, which must satisfy the boundary condition.

If the differential equation is the differential equation of 4th order ($v^{IV} = -q/EI$) and satisfies the geometric constraints. Substituting equation (4) into equation (3) we obtain:

$$L\left\{x, \sum_{i=1}^{p} a_i g_i(x), \sum_{i=1}^{p} a_i g'_i(x), \sum_{i=1}^{p} a_i g''_i(x), \ldots\right\} \equiv 0 \tag{5}$$

This equality has not to change if those are multiplied with independent functions$g_k(x)$, and it has the following form,

$$L\left\{x, \sum_{i=1}^{p} a_i g_i(x), \sum_{i=1}^{p} a_i g'_i(x), \sum_{i=1}^{p} a_i g''_i(x), \ldots\right\}.g_k(x) \equiv 0 \tag{6}$$

Continue to integrate with $k = 1, 2, \ldots p$ we get:

$$\int L\left\{x, \sum_{i=1}^{p} a_i g_i(x), \sum_{i=1}^{p} a_i g'_i(x), \sum_{i=1}^{p} a_i g''_i(x), \ldots\right\}.g_k(x)dx = 0 \tag{7}$$

Based on equation (7) we get a homogeneous system of algebraic equations of pth order with $a_1, a_2, \ldots a_p$ are variables. The CBL of the SDTS column with the tubular cross-section will be determined by solving the determining coefficients of the homogeneous system of the algebraic equations.

2.3. Monte Carlo simulation

Monte Carlo (MC) simulation is the method, which uses virtual values to simulate the randomness of variables and then estimates the reliability based on the law of great numbers [18]. Application of MC simulations for assessing the structural reliability of steel structures were conducted in previous studies [13,19]. In these works, algorithms and programs using MATLAB were developed and verified for evaluating the reliability of steel structures.

2.4. Global sensitivity method

Global sensitivity is method used for assessing the influence of input variables on the reliability of structures. In this study, we use Sobol's approach. Sensitivity analysis is performed based on Monte Carlo simulations. The effects of input parameters are evaluated using Sobol's indies in space $\mathbb{R}^{\mathbf{m}}$ [20–22].

3. Application of Bubnov-Galerkin method for predicting CBL of SDTS columns with TC

This study considers SDTS columns with the tubular cross-section, as shown in Fig. 1. The area moment of inertia of the variable sections $I = I_0\frac{4x(l-x)}{l^2}$, where I_0 is the area moment of inertia of the maximum cross-section of variable sections, $I_0 = 0.05D^4(1-\eta^4)$ and $\eta = D/d$. It should be noted that D and d are the outer and inner diameters of the column; l is the column length. The solution of the numeric string is $v = ax(l-x)$ with the solution conditions of existence $a \neq 0$. Application the Bubnov-Galerkin method for predict to the CBL of the SDTSC with the tubular cross-section.

The balanced differential equation of the system has the form. $L = v'' + \alpha^2 v = 0$ with $\alpha^2 = P/EI$ (8).

The selection solution of the numeric string is $v = ax(l-x)$. From solution of the numeric string, we get:

$$g_1(x) = x(l-x);\ g_1{}'(x) = l - 2x;\ g_1{}''(x) = 2;$$

Substituting the above calculated values into equation (7), we have.

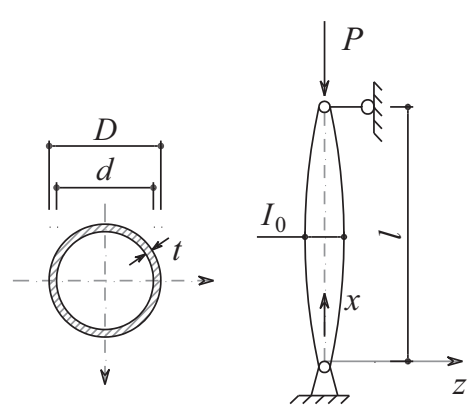

Fig. 1. Both ends pinned column and cross-section.

$$2\int_0^{\frac{l}{2}}\left[2a+\frac{P}{EI_0\frac{4x(l-x)}{l^2}}ax(l-x)\right]x(l-x)dx=0 \tag{9}$$

From equation (9), we apply Bubnov-Galerkin method for calculating the CBL of the SDTS column with the tubular cross-section. For verifying the Bubnov-Galerkin algorithm proposed, we used the Rayleigh-Ritz method, which is presented in [19] for solving the the critical buckling load of the symmetrically double tapered steel column, as shown in Fig. 1. The calculated results of Bubnov-Galerkin and Rayleigh-Ritz methods are shown in Table 1. It can be found that the difference between two methods is very trivial error of 0.15%, implying the reliability of Bubnov-Galerkin method.

Table 1
Comparison of calculated critical buckling load between different solutions.

Program computer		Ref. [19]	error (%)
The solution of the numeric string	P_{cr}		
$v = ax(l-x)$	$\frac{8.015EI_0}{l^2}$	$\frac{8EI_0}{l^2}$	0.150

4. Reliability analysis

4.1. Safety condition

The safety condition of the tapered steel column is satisfied if the external load (P) is smaller than the critical load of the column

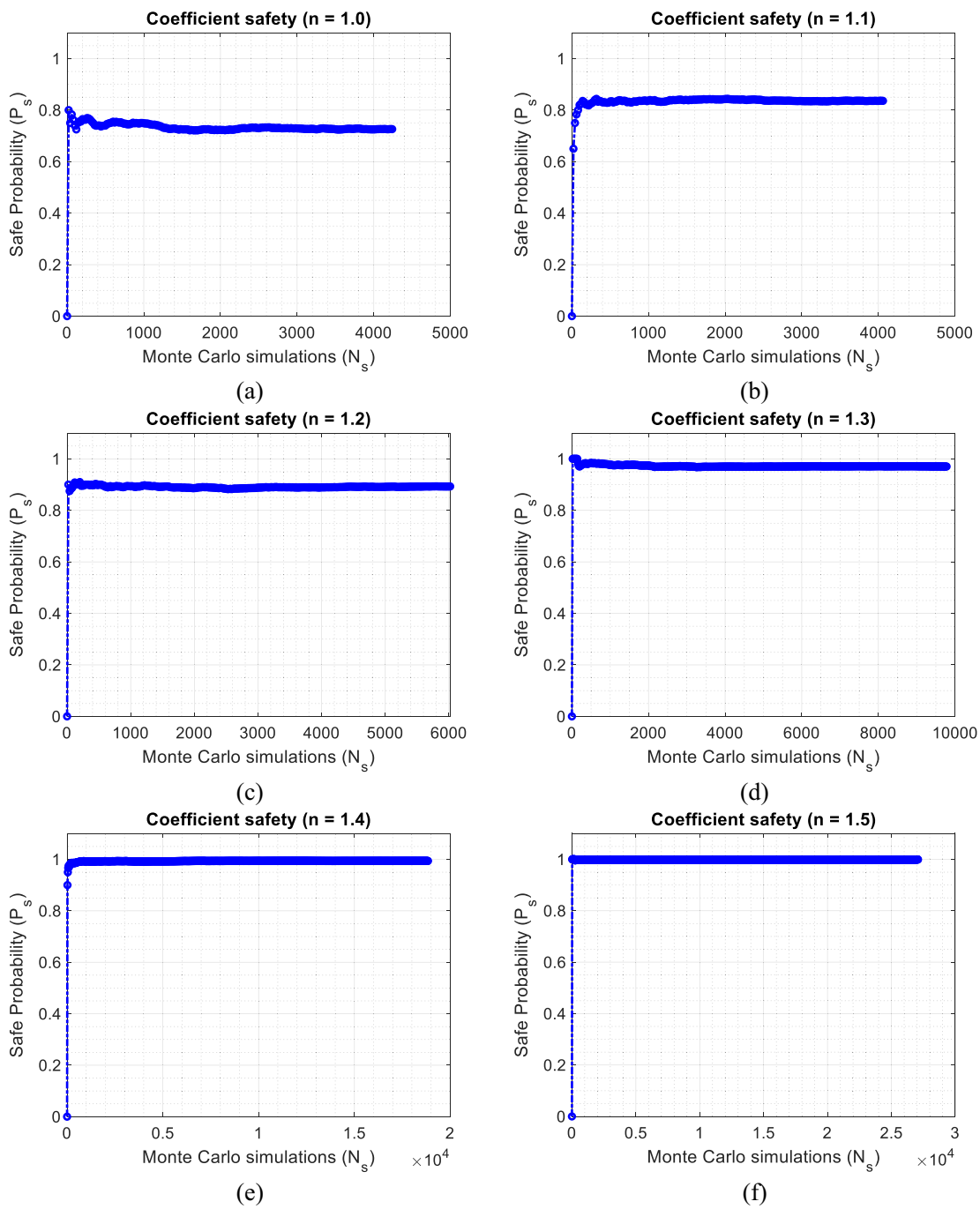

Fig. 2. Safe probability with different safety coefficients in Monte Carlo simulations.

Table 2
Properties of random model.

Properties	Units	Symbol	Nominal	Mean/ nominal	COV	Distribution	Ref.
Outer diameter	mm	X_1 (D)	330	1.00	0.05	Normal	[23]
Inner diameter	mm	X_2 (d)	300	1.00	0.05	Normal	[23]
Column length	mm	X_3 (l)	3000	–	–	Deterministic	[23]
Elastic modulus	mm	X_4 (E)	210	1.10	0.06	Lognormal	[24]

(P_{cr}). Since the input variables of the critical load are random therefore, the calculated value of P_{cr} is multiplied with a safety factor, n. The expression can be shown in Eq. (10).

$$P \leq n.P_{cr} \tag{10}$$

4.2. Deterministic model

Deterministic model of the critical load is constructed using input parameters including D, d, l, E, and the critical load, P_{cr} is calculated based on Bubnov-Galerkin method. The expression can be written as.

$$P \leq P_{cr}(D, d, l, E) \cdot n \tag{11}$$

4.3. Stochastic model

Stochastic model is developed base don the deterministic model considering input parameters D, d, l, and E are random variable ω. The expression can be written as.

Table 3
Input parameters for global sensitivity analysis.

Properties	Units	Symbol	Distribution	Range
Structures	mm	X_1 (D)	Uniform	313.5–346.5
	mm	X_2 (d)	Uniform	285–315
	mm	X_3 (L)	Uniform	2850–3150
Material	GPa	X_4 (E)	Uniform	199.5–220.5

Table 4
Mean estimation of first and total sensitivity Sobol's indices with 200,000 Monte-Carlo simulation.

Variable	1st sensitivity Sobol' indices	Total sensitivity Sobol' indices
X_1 (D)	0.66913	0.68535
X_2 (d)	0.28910	0.29884
X_3 (L)	0.00488	0.00755
X_4 (E)	0.01792	0.03006

$$P \leq P_{cr}(D(\omega), d(\omega), L, E(\omega)) \cdot n \tag{12}$$

We combine random model and Monte Carlo simulation for assessing the reliability of the double tapered steel column.

4.4. Analysis results

The reliability assessment of the critical load is performed with the random input parameters showing in Table 2. For the safety coefficient n = 1.0, the failure probability P_f = 0.2545, after performing 4260 MC simulations with convergence criteria of 1.0%, as shown in Fig. 2(a). This result implies that considering the randomness of input parameters is important and necessary in design practices.

For estimating a safe probability of 100%, this study covers a wide range of safety coefficients from 1.1 to 1.5. Fig. 2(b-f) show the safe probability of the SDTS column with different safety coefficients. It can be observed that the probability of failure (P_f) of the column is decreased from 0.1640 to 0.1071, 0.0297, 0.0061, and 0.0 with a variation of safety coefficients (n) from 1.1 to 1.2, 1.3, 1.4, and 1.5, respectively. Also, the corresponding MC simulations require from 4080 to 6040, 9800, 18860, and 2.71e4. In other word, the probability of safety of the column is increased with the increment of safety coefficients. The safe probability of 100% achieves at n = 1.5. This is a crucial suggestion for designers.

5. Effects of input variables

The influence of input parameters on the reliability of the steel column is also investigated in this study. We use global Sobol's indices to evaluate the sensitivity. The first order and total sensitivity indices are employed. It should be noted that the input variables include D, d, l, and E. The nominal values and distributions of those parameters are shown in Table 3.

The calculated results are shown in Table 4 and Fig. 3. It can be seen that the first order and total sensitivity have a small variation, implying that the input variables are independent. Moreover, the outer diameter has a largest influence (67%) on the critical load, followed by the inner diameter with 29%. The elastic modulus of

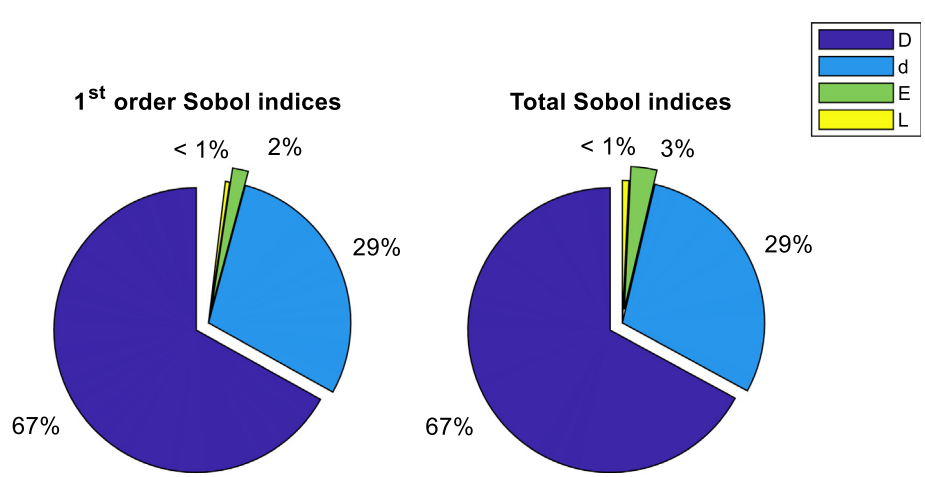

Fig. 3. Sensitivity of input parameters on the critical load.

steel material and the column length have a trivial effect, with 3% and 1%, respectively.

6. Conclusions

This study presents the assessment of reliability of symmetric double tapered steel (SDTS) columns considering the randomness of input parameters. The reliability method is based on the stochastic model, which is constructed using deterministic model. Additionally, Bubnov-Galerkin method is used to calculate the critical load in the deterministic model, while Monte Carlo (MC) simulation is employed for the stochastic model. Moreover, the influence of input parameters on the critical load of the steel column is investigated in this study. Following conclusions are achieved.

- A procedure based on Bubnov-Galerkin method, deterministic model, stochastic model, and MC simulations is proposed to calculate the critical load of the SDTS column. A verification is performed to check the accuracy of the method.
- A variation of safety coefficients, from 1.1 to 1.5, is investigated to find the maximum probability of safety. The safety coefficient of 1.5 provides the highest reliability. This finding is useful for structural designs.
- The diameters of the cross-section of the column show to be the most influential parameters on the calculated critical load of the SDTS columns.

CRediT authorship contribution statement

Duy-Duan Nguyen: Conceptualization, Methodology, Visualization, Writing – review & editing. **Trong-Ha Nguyen:** Conceptualization, Methodology, Formal analysis, Writing – review & editing.

Declaration of Competing Interest

The authors declare that they have no known competing financial interests or personal relationships that could have appeared to influence the work reported in this paper.

References

[1] J.M. Gere, S.P. Timoshenko, Theory of elastic stability. (1961).
[2] G. C. Lee, M. Morrell, and R. L. Ketter, "Design of Tapered Members," STATE UNIV OF NEW YORK BUFFALO DEPT OF CIVIL ENGINEERING1971.
[3] M.A. Hirt, M. Crisinel, Charpentes métalliques: conception et dimensionnement des halles et bâtiments, PPUR presses polytechniques (2005).
[4] L. Marques, A. Taras, L.S. da Silva, R. Greiner, C. Rebelo, Development of a consistent buckling design procedure for tapered columns, J. Constr. Steel Res. 72 (2012) 61–74.
[5] X.-H. Dang, T.-H. Nguyen, "Reliability assessment of buckling strength for tapered columns of steel portal frames with flexible joint of beam - column " (in en), proceedings of the international conference on the 55th anniversary of establishment of Vietnam institute for building science and technology (2018).
[6] T.-H. Nguyen, N.-L. Tran, D.-D. Nguyen, Prediction of Critical Buckling Load of Web Tapered I-Section Steel Columns Using Artificial Neural Networks, Int. J. Steel Structures 21 (4) (2021) 1159–1181.
[7] N. Q. V, "Report on research results," Hanoi University of Civil Engineering2007.
[8] M. Gündel, B. Hoffmeister, M. Feldmann, "Reliability Analysis on Capacity Design Rules for Steel Frames," in *Seismic Design of Industrial Facilities*, in: S. Klinkel, C. Butenweg, G. Lin, B. Holtschoppen (Eds.), Seismic Design of Industrial Facilities, Springer Fachmedien Wiesbaden, Wiesbaden, 2014, pp. 337–348.
[9] D.G. Cacuci, Sensitivity theory for nonlinear systems. I. Nonlinear functional analysis approach, J. Mathematical Physics 22 (12) (1981) 2794–2802.
[10] A. Pirmoz, M.S. Marefat, Reliability assessment of compression columns in seismic EBFs, J. Constr. Steel Res. 104 (2015) 274–281.
[11] N.-L. Tran, T.-H. Nguyen, V.-P. Phan, Reliability assessment of Buckling Strength for Battened Built-up Columns steel considering shear deformations, IOP Conf. Ser.: Mater. Sci. Eng. 869 (5) (2020) 052041.
[12] M.A. Hadianfard, S. Malekpour, M. Momeni, Reliability analysis of H-section steel columns under blast loading, Struct. Saf. 75 (2018) 45–56.
[13] N.T. Ha, Reliability assessment of frame steel considering semi-rigid connections, J. Materials Eng. Struct. 6 (1) (2019) 119–126.
[14] J.-J. Li, G.-Q. Li, Reliability-based integrated design of steel portal frames with tapered members, Struct. Saf. 26 (2) (2004) 221–239.
[15] T.S. Tankova, Stability design of steel columns, beams and beam-columns: behaviour, general formulation and reliability, Universidade de Coimbra, 00500, 2018.
[16] M. Malekizadeh, N. Fanaie, A.A. Pirasteh, Seismic reliability evaluation of steel gabled frames consisting of web-tapered members using joint analysis of hazard and fragility, Structures 37 (2022) 459–468.
[17] L.T. Trinh, Đ.V. Binh, Stability structures, Science Technics Publishing House (2002).
[18] T. Ngoc-Long, T. Ha, The effect of metal corrosion on the structural reliability of the Pre-Engineered steel frame, J. Materials Engineering Structures «JMES» 7 (2) (2020) 155–165.
[19] T.-H. Nguyen, D.-D. Nguyen, Reliability Assessment of Steel-Concrete Composite Beams considering Metal Corrosion Effects, Advances in Civil Engineering 2020 (2020) 1–15.
[20] T. Nguyen, Global Sensitivity Analysis Of In-Plane Elastic Buckling Of Steel Arches, Eng. Technology Appl. Sci. Research 10 (6) (2020) 6476–6480.
[21] N.-L. Tran, T.-H. Nguyen, Global Sensitivity Analysis of the Buckling Strength for Battened Built-up Columns Steel Considering Shear Deformations, Springer, 2021, pp. 45–51.
[22] N.-L. Tran, T.-H. Nguyen, Effect of Metal Corrosion on the Structural Reliability of the 3D Steel Frames, Springer, 2021, pp. 39–44.
[23] B. Ellingwood, J.G. MacGregor, T.V. Galambos, C.A. Cornell, Probability based load criteria: load factors and load combinations, J. Structural Division 108 (5) (1982) 978–997.
[24] F.M. Bartlett, R.J. Dexter, M.D. Graeser, J.J. Jelinek, B.J. Schmidt, T.V. Galambos, Updating standard shape material properties database for design and reliability, Eng. J.-Am. Institute Steel Const. 40 (1) (2003) 2–14.